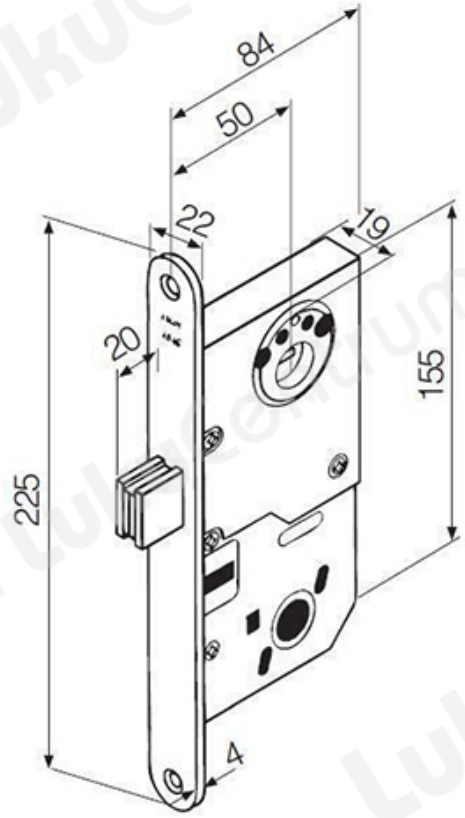TOOTENIMETUS	SOODUS	HIND
[illegible]		
Ð?Ð°Ð¼Ð¾Ðº Ð²Ñ?Ñ•Ð¾ÐºÐ¾Ð³Ð¾ ÐºÐ»Ð°Ñ•Ñ•Ð° Ð·Ð°Ñ?Ð¸Ñ?Ñ? ABLOY 4181/50 Fe/ZL	101.53 ?	116.03 ?