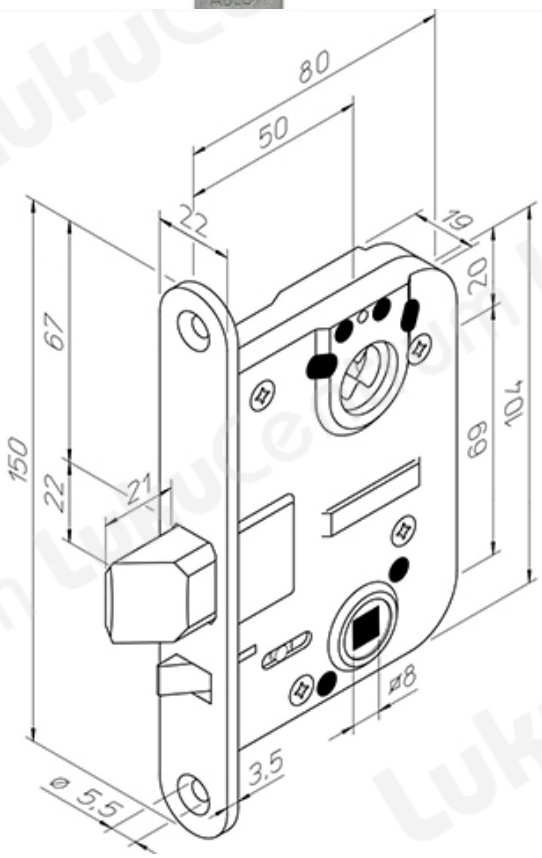TOOTENIMETUS	SOODUS	HIND
Lock case ABLOY 4193 Fe/ZL (left)		0.00 ?
Lock case ABLOY 4193 Fe/ZL (right)		0.00 ?