PASSTECH E-smart Classic ZP200R

Tootekirjeldus

Durable and Enhanced design (IP55)

- High impact polycarbonate/Metal housing & waterproof case (IP55)
- Aluminum die-casting locking mechanism Spring Latch & Deadbolt

Audit Trail function

- Up to 150 lock history events as default

Easy to fit and retrofit

- Engineered to work on all standard material doors : Metal, wood & laminate lockers and caseworks

Various programming options

- Free selection(Shared use) or assigned mode(Permanent use)
- Single user for multi lockers or multi users per single locker

Time based operation

- Automatic door opening at programmed time
- Set a time limit on the lock and/or user card

Smartphone Accessible via BLE

- Exclusive technology of RF card and smartphone synchronization
- User friendly mobile App makes lock operation convenient and simple

Applied 13.56Mhz Mifare Type A RF protocol with various type of User key media

- Card type, Wristband type, keychain type, etc. can be used

Easy integration with existing access control system of user site

- One card system

3~5 years battery life depending on the usage

- Approximately 15,000 cycles

Flexible and convenient operation

- Simple lock programming change or upgrade firmware using RF card. No other programming devices required.

Highest Security

- Unique security key by AES128 security algorithm

TOOTENIMETUS	SOODUS	HIND
Ð-Ð»ÐµÐºÑ‚Ñ€Ð¾Ð½Ð½Ñ‹Ð¹ Ð·Ð°Ð¼Ð¾Ðº Ð´Ð»Ñ• ÑˆÐºÐ°Ñ„Ñ‡Ð¸ÐºÐ¾Ð² E-smart Classic ZP200R-01 (Mifare, Ð¿Ñ€Ñƒ¶Ð¸Ð½Ð½Ð°Ñ• Ð·Ð°Ñ‰ÐµÐ»ÐºÐ°)		0.00 €
Ð-Ð»ÐµÐºÑ‚Ñ€Ð¾Ð½Ð½Ñ‹Ð¹ Ð·Ð°Ð¼Ð¾Ðº Ð´Ð»Ñ• ÑˆÐºÐ°Ñ„Ñ‡Ð¸ÐºÐ¾Ð² E-smart Classic ZP200R-02 (Mifare, Deadbolt)		0.00 €
Ð-Ð»ÐµÐºÑ‚Ñ€Ð¾Ð½Ð½Ñ‹Ð¹ Ð·Ð°Ð¼Ð¾Ðº Ð´Ð»Ñ• ÑˆÐºÐ°Ñ„Ñ‡Ð¸ÐºÐ¾Ð² E-smart Classic ZP200RN-01 (Mifare/Desfire, Ð¿Ñ€Ñƒ¶Ð¸Ð½Ð½Ð°Ñ• Ð·Ð°Ñ‰ÐµÐ»ÐºÐ°)		0.00 €
Ð-Ð»ÐµÐºÑ‚Ñ€Ð¾Ð½Ð½Ñ‹Ð¹ Ð·Ð°Ð¼Ð¾Ðº Ð´Ð»Ñ• ÑˆÐºÐ°Ñ„Ñ‡Ð¸ÐºÐ¾Ð² E-smart Classic ZP200RN-02 (Mifare/Desfire, Deadbolt)		0.00 €

- 01

- 02

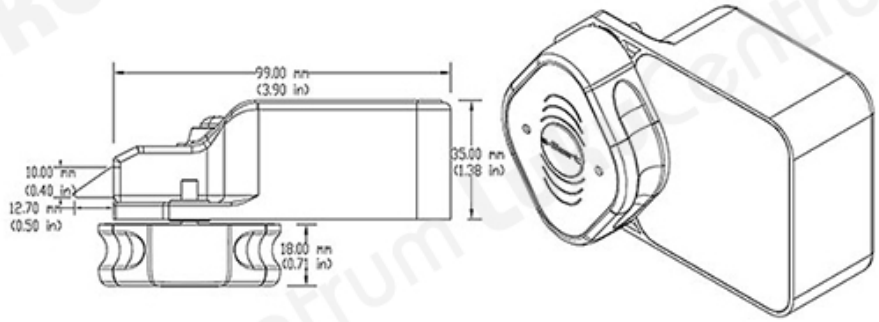

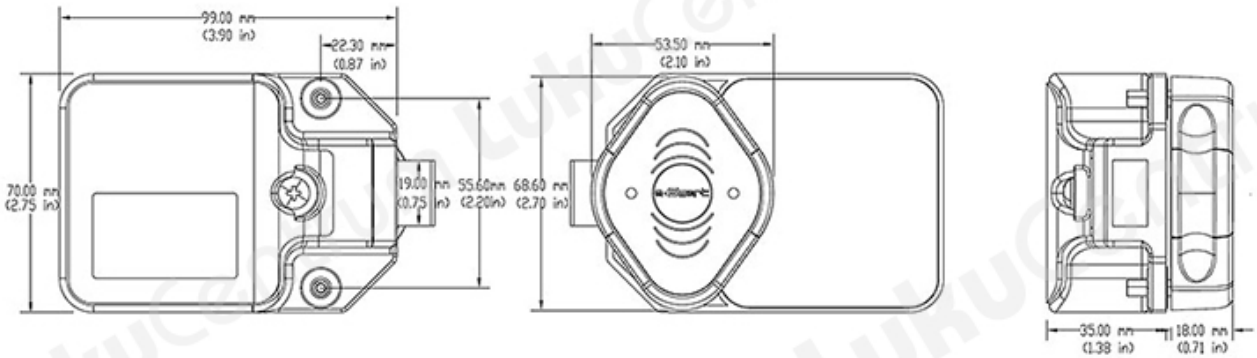

LukuCentrum