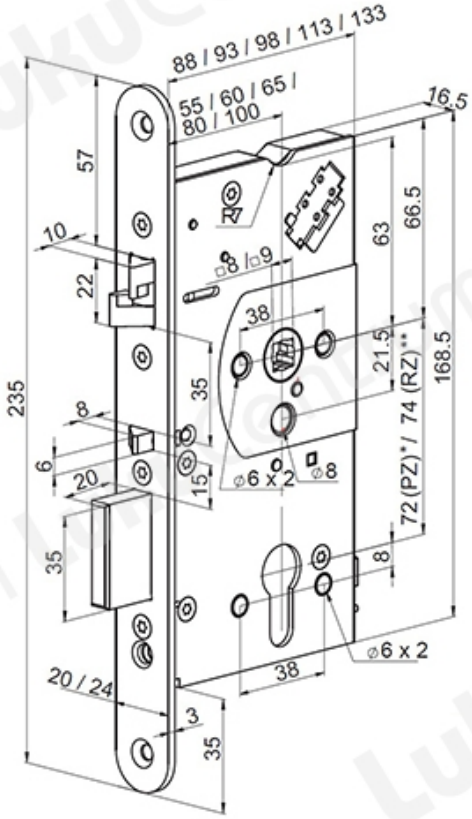TOOTENIMETUS	SOODUS	HIND
Solenoid lock Abloy EL560/100 (split spindle, symmetrical front plate)		727.57 ?
Solenoid lock Abloy EL560/55 (split spindle, symmetrical front plate)		727.57 ?
Solenoid lock Abloy EL560/65 (split spindle, symmetrical front plate)		727.58 ?