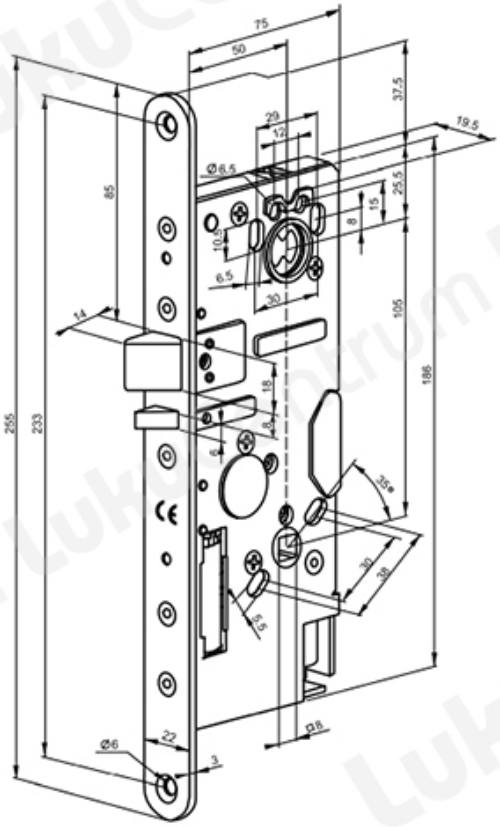TOOTENIMETUS	SOODUS	HIND
Motor lock Abloy PE592/50 mm (right hand, without a striker plate and a cable)		1322.88 ?