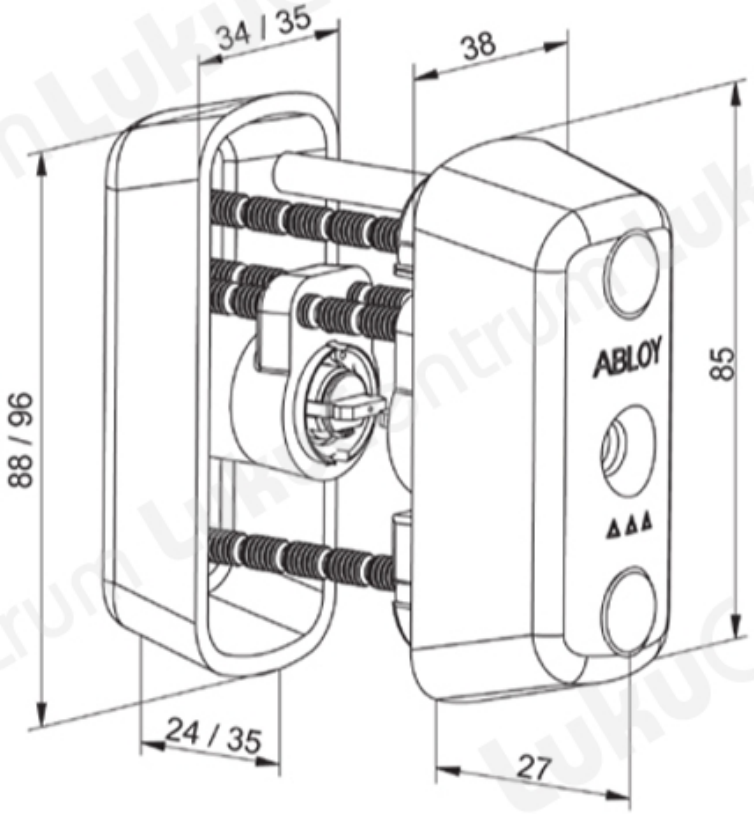TOOTENIMETUS	SOODUS	HIND
Ð¦Ð¸Ð¼Ð¼ÐµÑ?ABLOY CY065U Novel CR (Ð±Ð»ÐµÑ•Ñ?Ñ•Ñ?Ð¸Ð¹ Ñ Ñ?Ð¾Ð¼, c 3 ÐºÐ»Ñ?Ñ?Ð°Ð¼Ð¸)		214.92 ?
Ð¦Ð¸Ð¼Ð¼ÐµÑ? ABLOY CY065U Novel CR (Ð±Ð»ÐµÑ•Ñ?Ñ•Ñ?Ð¸Ð¹ Ñ Ñ?Ð¾Ð¼, Ð±ÐµÐ· ÐºÐ»Ñ?Ñ?ÐµÐ¹)		168.02 ?
Ð¦Ð¸Ð¼Ð¼ÐµÑ? ABLOY CY065U Novel HCR (Ð¼Ð°Ñ?Ð¾Ð²Ñ?Ð¹ Ñ Ñ?Ð¾Ð¼, c 3 ÐºÐ»Ñ?Ñ?Ð°Ð¼Ð¸)		236.40 ?
Ð¦Ð¸Ð¼Ð¼ÐµÑ? ABLOY CY065U Novel HCR (Ð¼Ð°Ñ?Ð¾Ð²Ñ?Ð¹ Ñ Ñ?Ð¾Ð¼, Ð±ÐµÐ· ÐºÐ»Ñ?Ñ?ÐµÐ¹)		184.87 ?
Ð¦Ð¸Ð¼Ð¼ÐµÑ? ABLOY CY065U Novel NiHa (Ð¼Ð°Ñ?Ð¾Ð²Ñ?Ð¹ Ð½Ð¸ÐºÐµÐ»Ñ?, c 3 ÐºÐ»Ñ?Ñ?Ð°Ð¼Ð¸)		250.16 ?
Ð¦Ð¸Ð¼Ð¼ÐµÑ? ABLOY CY065U Novel NiHa (Ð¼Ð°Ñ?Ð¾Ð²Ñ?Ð¹ Ð½Ð¸ÐºÐµÐ»Ñ?, Ð±ÐµÐ· ÐºÐ»Ñ?Ñ?ÐµÐ¹)		193.31 ?