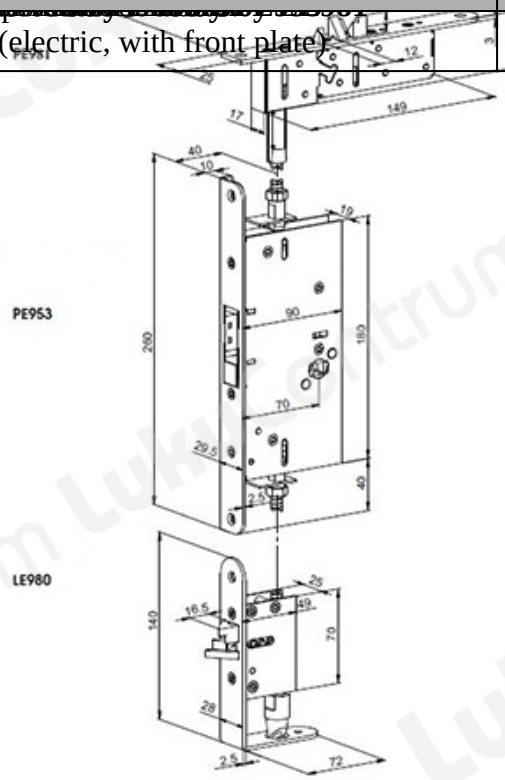TOOTENIMETUS	SOODUS	HIND
Lock case set ABLOY PE912 (electric, with front plate)	367.77 ?	420.31 ?