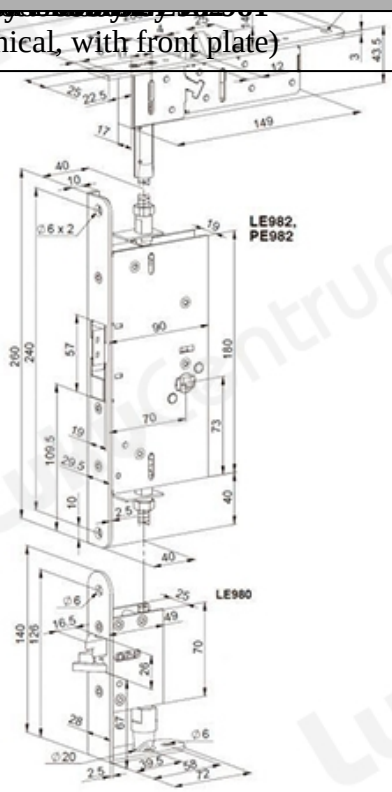TOOTENIMETUS	SOODUS	HIND
Lock case set ABLOY PE911 (mechanical, with front plate)	367.79 ?	420.33 ?