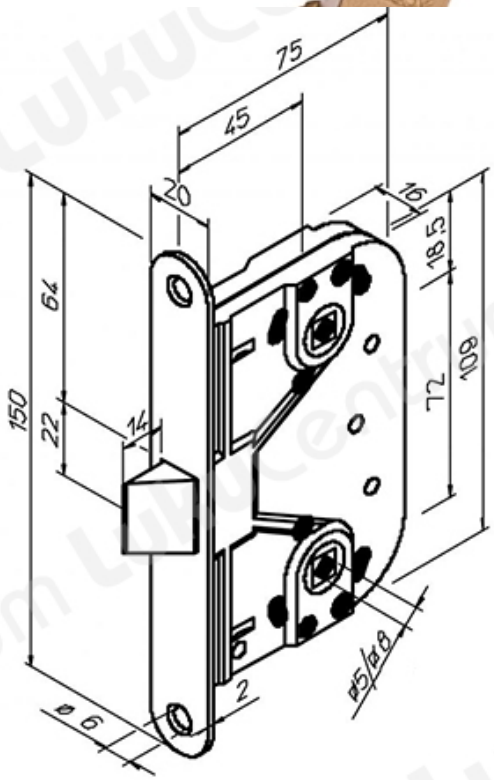TOOTENIMETUS	SOODUS	HIND
Lock case ABLOY 414 Fe/MME (handedness is universal)	13.80 ?	15.77 ?
Lock case ABLOY 414 Fe/ZN (handedness is universal)	13.80 ?	15.77 ?