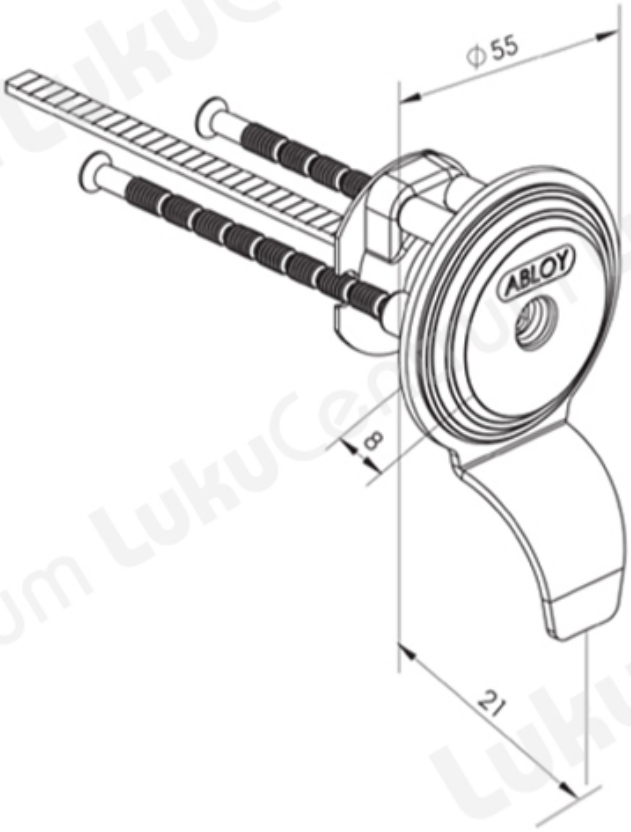TOOTENIMETUS	SOODUS	HIND
Cylinder ABLOY CY053T Protec2 CR (bright chrome, w 3 keys)		194.63 ?
Cylinder ABLOY CY053T Protec2 CR (bright chrome, w/o keys)		126.88 ?
Cylinder ABLOY CY053T Protec2 HCR (brushed chrome, w/o keys)		139.62 ?