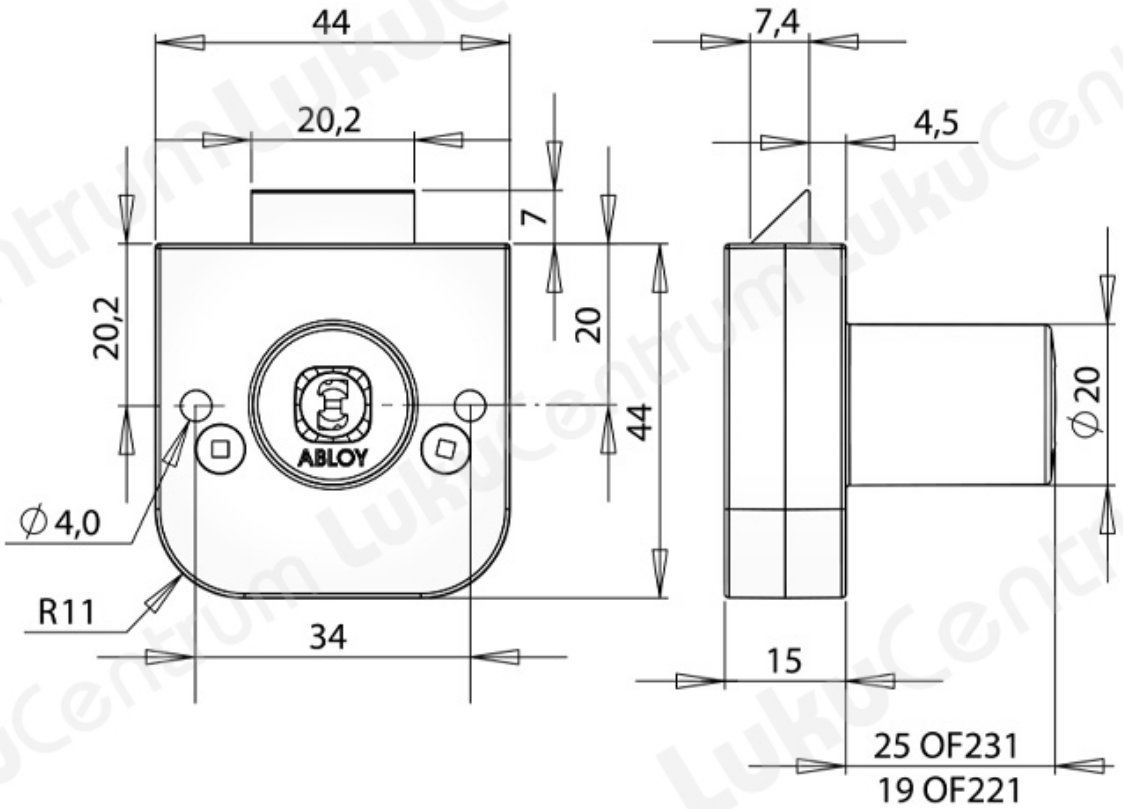TOOTENIMETUS	SOODUS	HIND
Cabinet lock ABLOY OF221C Classic (w 2 keys)		49.00 ?
Cabinet lock ABLOY OF221C Classic (w/o keys)		44.07 ?